Static

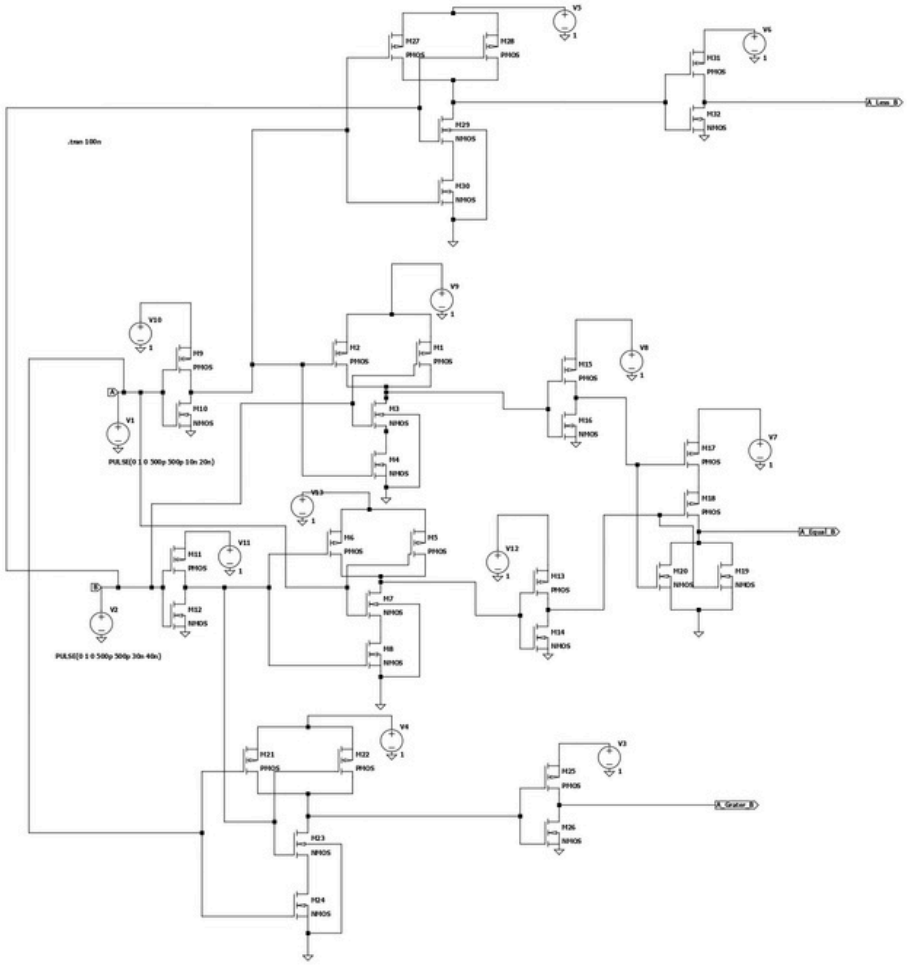

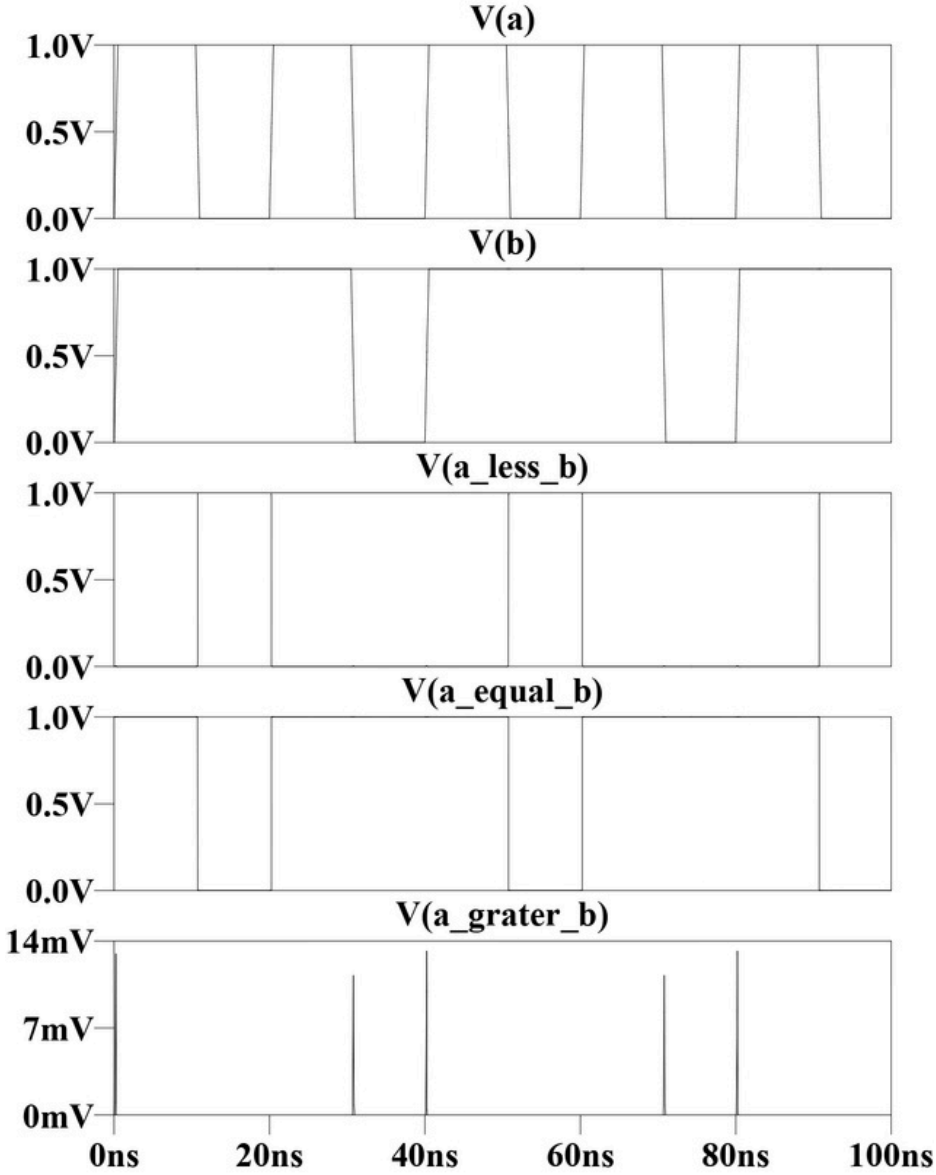
V(a)
1.0V
0.5V
0.0V
V(b)
1.0V
0.5V
0.0V
V(a_less_b)
1.0V
0.5V
0.0V
V(a_equal_b)
1.0V
0.5V
0.0V
V(a_grater_b)
14mV
7mV
0mV
0ns
20ns
40ns
60ns
80ns
100ns

Static

Operating point DC

v(A_less_B) V = 96.139489nv
V(A_Equal_B) V= 1.799999V
V(A_Grater_B_) V = 96.139502nV
Voltage = 1.8v
Transistor Count = 32

Rise Time Fall Time & Differentciate

(A_Less_B) rise time 50.79ns voltage = 544.64mv
Fall Time 609.27297 voltage = 211.81676mV
Differ 9.3264ns voltage = - 718.36mV
Frequency = 107.2222MHZ

(A_Equal_B) rise time 50.79ns voltage= 1.326124V
Fall Time 60.0456 ns voltage = 134.094mv
Differ 30.6994382ns voltage= -1.475435V
Frequency = 32.5784MHz

(A_Grater_B) risetime 30.650685 voltage = 14.71344mV
Fall Time 40.435388 ns voltage = 17.347mV
Differ 10.233167ns , volatge =0V
fequency =97.721579Mhz

Dc Opearting point curent & dissipation

V1 = 0A, 0W
V2 = 1A, 0W
V3 = -5.11PA, -9.20PW
V4 = -10.47PA, -18.85PW
V5 = -6.98PA, -12.57PW
V6 = -5.11PA, -9.20 PW
V7 =-10.34PA, -18.61PW
V8 = -5.11PA,-9.20PW
V9 = -6.98 PA, -12.57PW
V10 = -5.17PA, -9.30PW
V11 = -5.17PA,9.30PW
V12 = -5.11PA, 9.20PW
V13 = -6.98PA, 12.57PW

TG

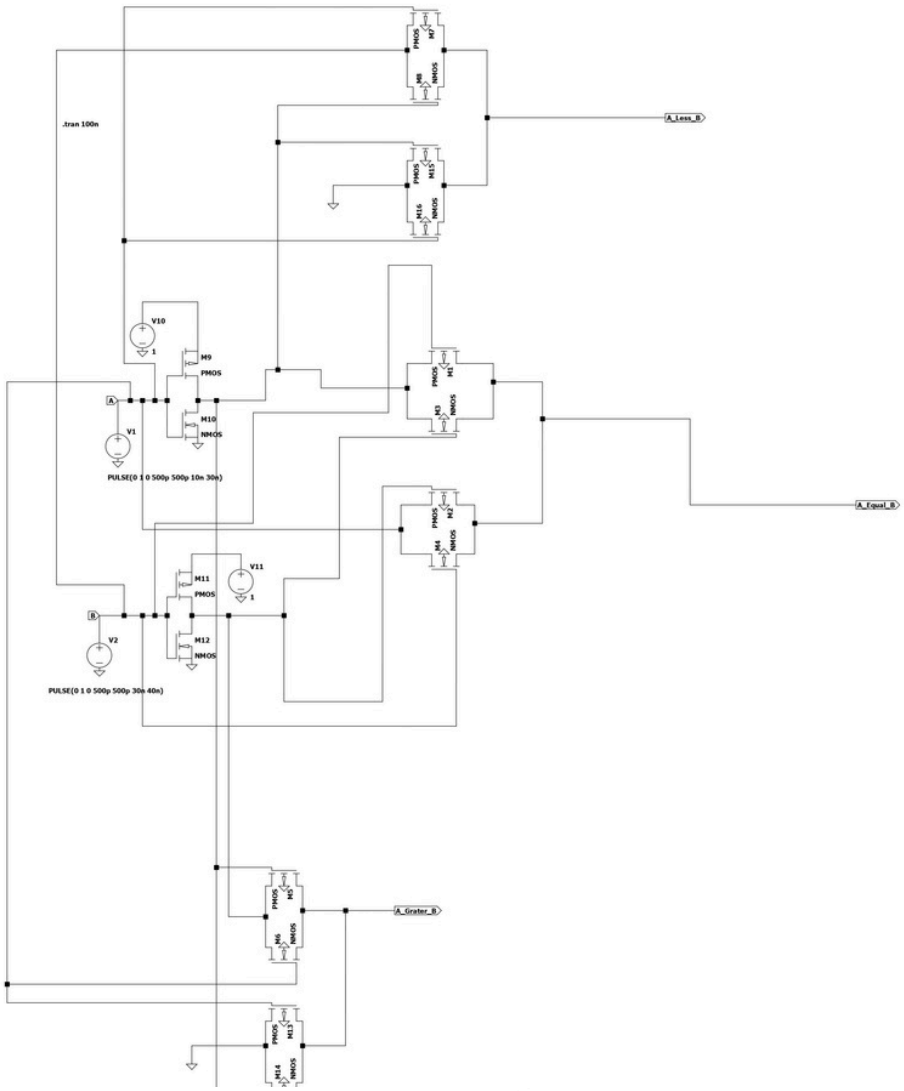
.tran 100n
A_Less_B
A_Equal_B
A_Grater_B
V10
M9
PMOS
M10
NMOS
V1
PULSE(0 1 0 500p 500p 10n 30n)
V11
M11
PMOS
M12
NMOS
V2
PULSE(0 1 0 500p 500p 30n 40n)

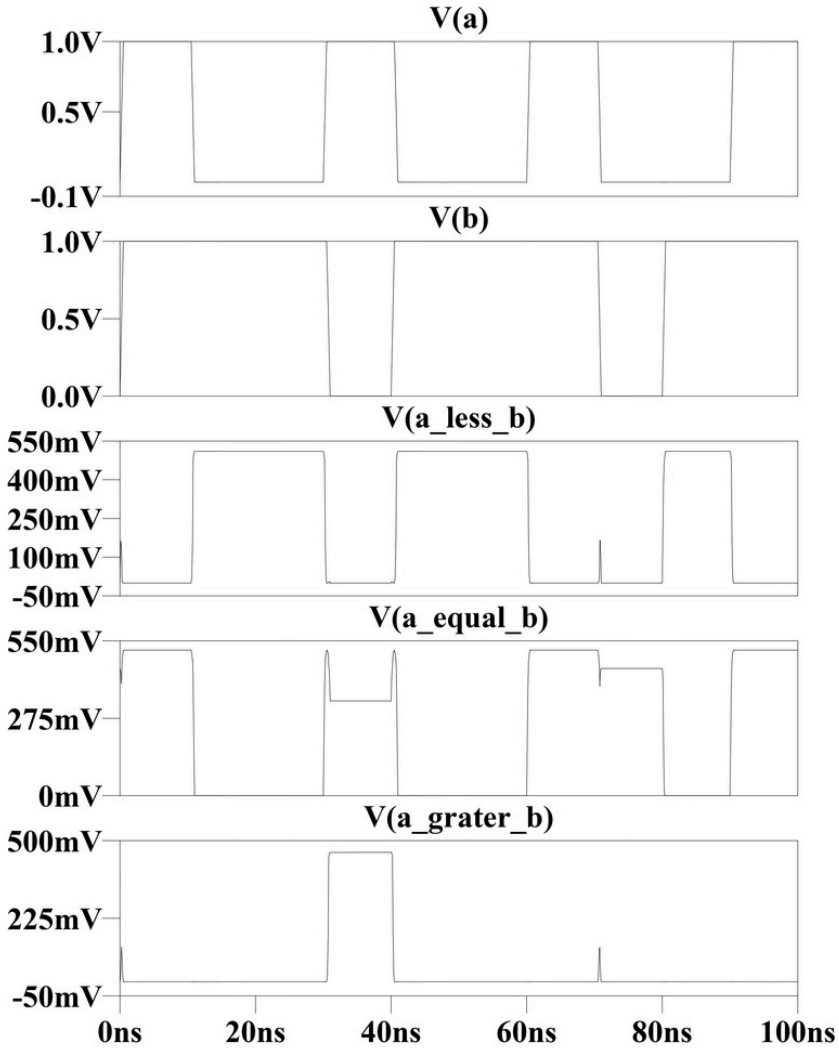
V(a)
1.0V
0.5V
-0.1V
V(b)
1.0V
0.5V
0.0V
V(a_less_b)
550mV
400mV
250mV
100mV
-50mV
V(a_equal_b)
550mV
275mV
0mV
V(a_grater_b)
500mV
225mV
-50mV
0ns
20ns
40ns
60ns
80ns
100ns

TG

Operating point DC

v(A_less_B) V = 0V
V(A_Equal_B) V= 461.850667mv
V(A_Grater_B_) V = 1.071838uV
Voltage = 1.8v
Transistor Count = 16

Rise Time Fall Time & Differentciate

(A_Less_B) rise time 10.79ns voltage = 499.25mv
Fall Time 20.3115ns voltage = 260.173mV
Differ 9.29ns voltage = - 26.08mV
Frequency = 107.64 MHz

(A_Equal_B) rise time 115.40ps voltage= 427.35 mV
Fall Time 10.96 ns voltage =129.74 mv
Differ 31.16 ns voltage= 486.23mV
Frequency = 32.09MHz

(A_Grater_B) risetime 30.75ns voltage = 222.85 mV
Fall Time 40.45 ns voltage = 21.39 mV
Differ 9.52 ns , volatge =95.74mV
fequency =105.03Mhz

Dc Opearting point & Dissipition

V1 = 923.70133fA ,0W
V2 = -0A, -0W
v10 =V3 = -29.23uA, -52.62uW
V11=V4 = -29.22uA, -52.59uW

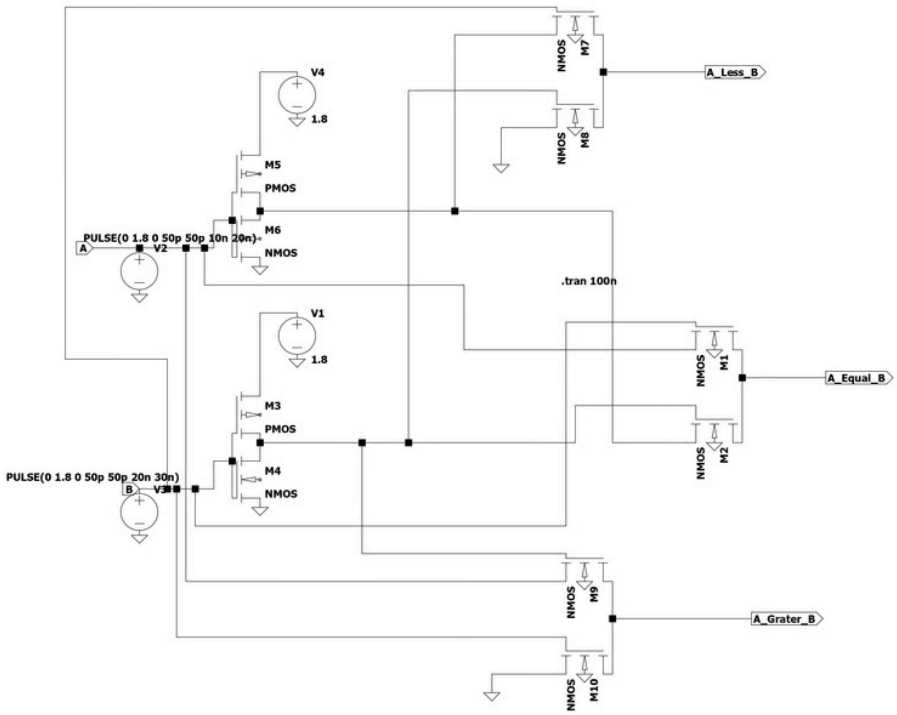
V4
1.8
M5
PMOS
M6
NMOS
PULSE(0 1.8 0 50p 50p 10n 20n)
A
V2
.tran 100n
V1
1.8
M3
PMOS
M4
NMOS
PULSE(0 1.8 0 50p 50p 20n 30n)
B
V3
NMOS
M7
A_Less_B
NMOS
M8
NMOS
M1
A_Equal_B
NMOS
M2
NMOS
M9
A_Grater_B
NMOS
M10

Pass

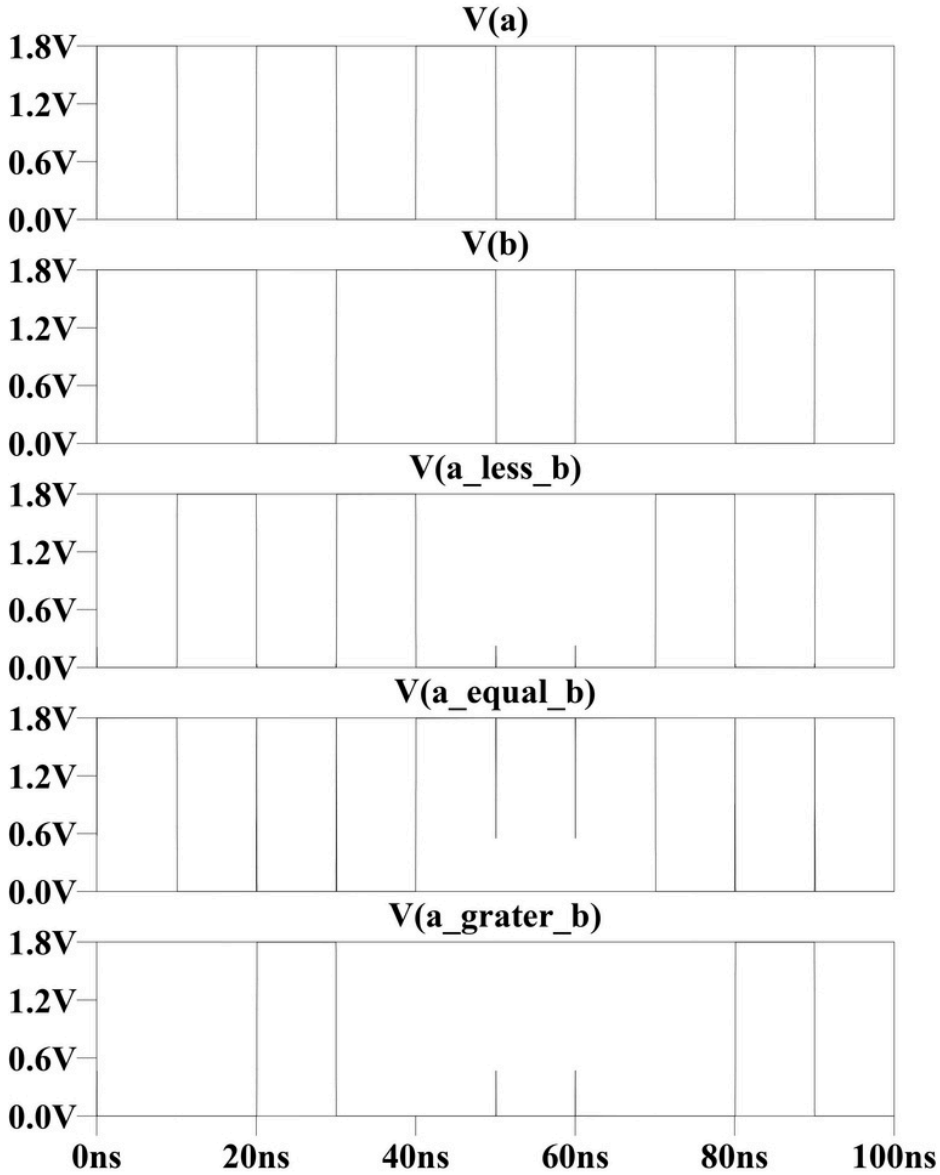
V(a)
1.8V
1.2V
0.6V
0.0V
V(b)
1.8V
1.2V
0.6V
0.0V
V(a_less_b)
1.8V
1.2V
0.6V
0.0V
V(a_equal_b)
1.8V
1.2V
0.6V
0.0V
V(a_grater_b)
1.8V
1.2V
0.6V
0.0V
0ns
20ns
40ns
60ns
80ns
100ns

PTL

Operating point DC

v(A_less_B) V = 49.999986nV
V(A_Equal_B) V= 1.79926238V
V(A_Grater_B_) V = 0V
Voltage = 1.8v
Transistor Count = 10

Rise Time Fall Time & Differentciate

(A_Less_B) rise time 10.77ns voltage = 1.32V
Fall Time 20.248ns voltage = 875.77mV
Differ 9.36ns voltage = - 1.519V
Frequency = 106.80 MHz

(A_Equal_B) rise time 20.24ns voltage= 883.40 mV
Fall Time 30.19 ns voltage =196.13 nv
Differ 9.87 ns voltage= -950.83 mV
Frequency = 101.27 MHz

(A_Grater_B) risetime 30.13ns voltage = 1.797 V
Fall Time 30.711 ns voltage = 1.037 V
Differ 1.008 ns , volatge =1.729 V
fequency = 991.25 Mhz

Dc Opearting point & Dissipition

V1 = -5.17012PA ,-9.306229PW
V2 = -1.7990PA, -0W
V3 = 0A, 0W
V4 = -16.007PA, -28.814244PW

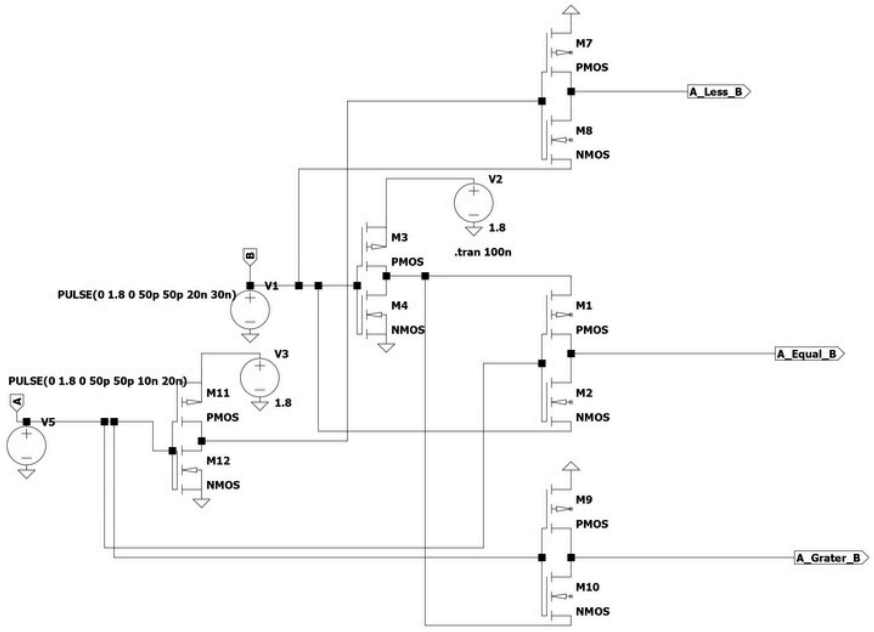
M7
PMOS
A_Less_B
M8
NMOS
V2
1.8
.tran 100n
M3
PMOS
PULSE(0 1.8 0 50p 50p 20n 30n)
V1
M4
NMOS
M1
PMOS
A_Equal_B
V3
PULSE(0 1.8 0 50p 50p 10n 20n)
M11
1.8
M2
NMOS
V5
PMOS
M12
NMOS
M9
PMOS
A_Grater_B
M10
NMOS

GDI

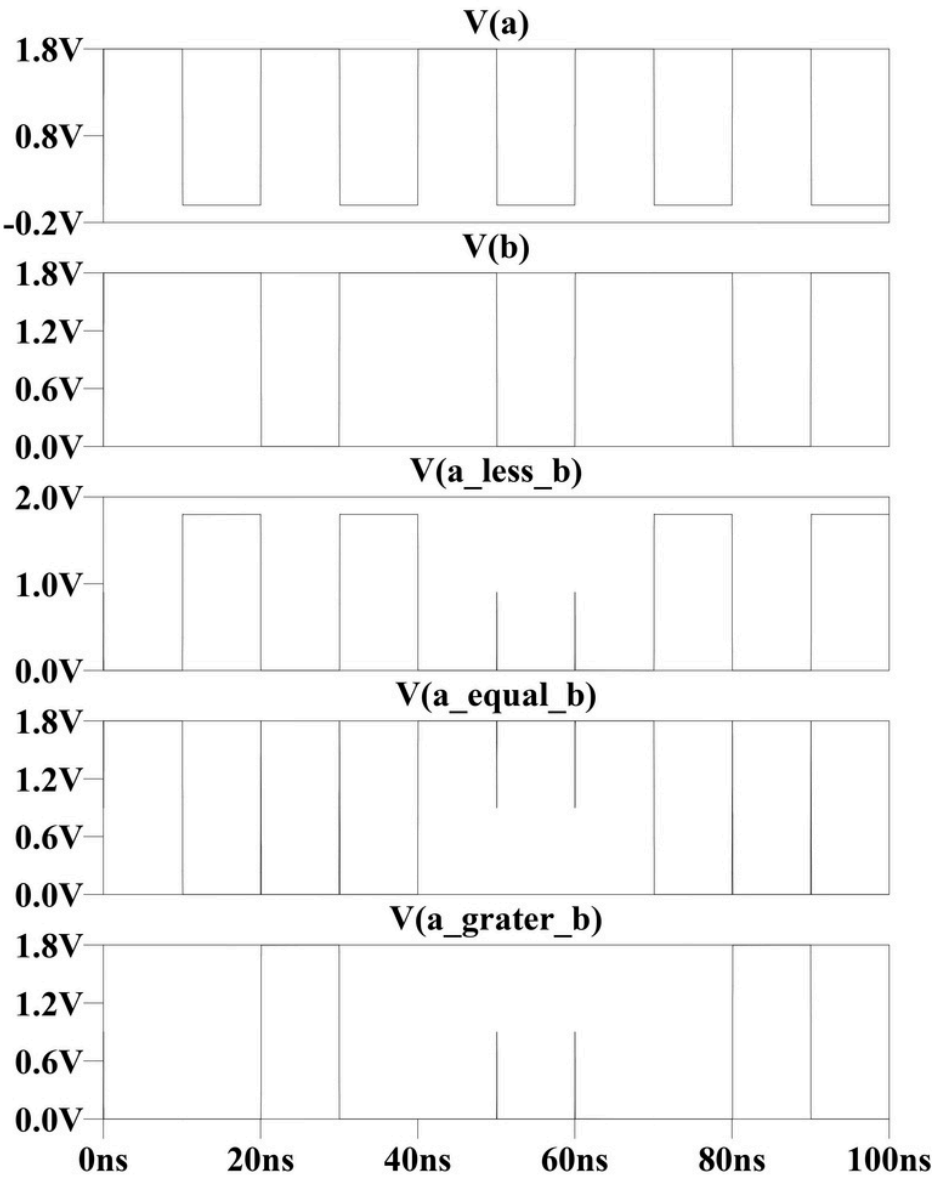
V(a)
1.8V
0.8V
-0.2V
V(b)
1.8V
1.2V
0.6V
0.0V
V(a_less_b)
2.0V
1.0V
0.0V
V(a_equal_b)
1.8V
1.2V
0.6V
0.0V
V(a_grater_b)
1.8V
1.2V
0.6V
0.0V
0ns
20ns
40ns
60ns
80ns
100ns

GDI

Operating point DC

v(A_less_B) V = 2.997377e-27fV
V(A_Equal_B) V= 1.799995V
V(A_Grater_B_) V = 578.8194uV
Voltage = 1.8v
Transistor Count = 10

Rise Time Fall Time & Differentciate

(A_Less_B) rise time 10.732ns voltage = 730.138mv
Fall Time 9.1748ns voltage = 229.49mV
Differ 9.1748ns voltage = 4.95mV
Frequency = 108.993 MHz

(A_Equal_B) rise time 20.54ns voltage= 1.79 V
Fall Time 50.843ns voltage = 5787.86 mv
Differ 29.83 ns voltage= 55.830319 mV
Frequency = 33.52MHz

(A_Grater_B) risetime 30.75ns voltage = 878.159 mV
Fall Time 30.87 ns voltage = 4863.43 mV
Differ 288.517 ps , volatge =426.71mV
fequency =3.460 GHz

Dc Opearting point & Dissipition

V1 = 3.3531035PA ,0W
V2 = 13.820667PA, -24.8722OW
V3 = -517.01727PA,-9.30632289PW
V4 = 0A, 0W

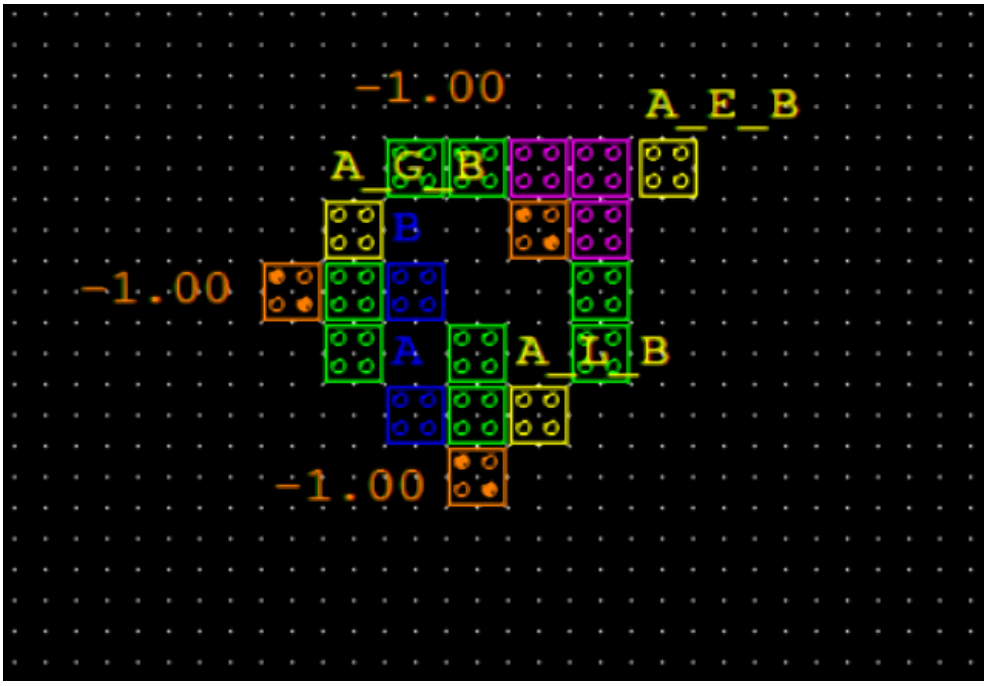
-1.00
A_E_B
A_G_B
B
-1.00
A
A_L_B
-1.00

QCA

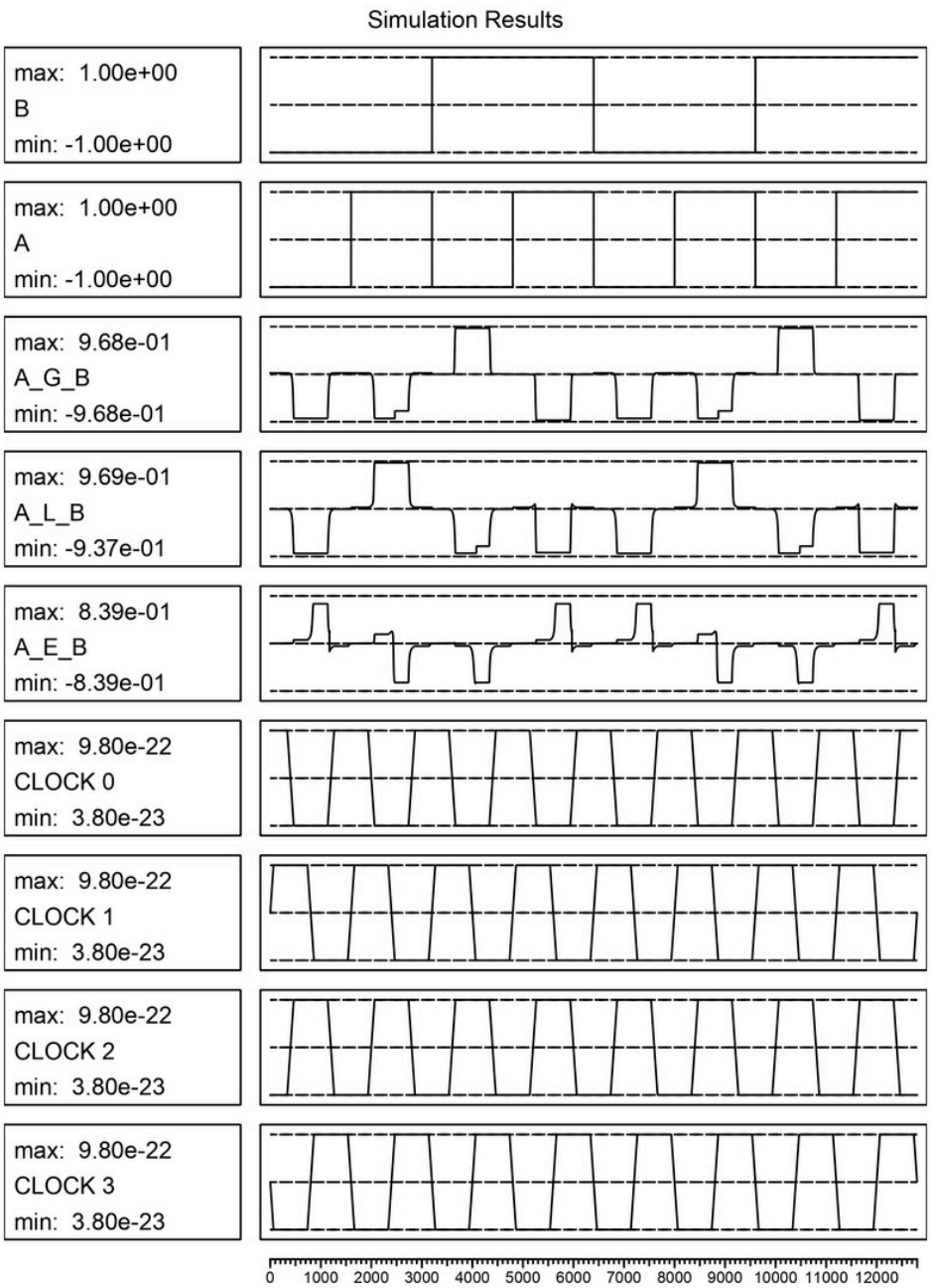
Simulation Results
max: 1.00e+00
B
min: -1.00e+00
max: 1.00e+00
A
min: -1.00e+00
max: 9.68e-01
A_G_B
min: -9.68e-01
max: 9.69e-01
A_L_B
min: -9.37e-01
max: 8.39e-01
A_E_B
min: -8.39e-01
max: 9.80e-22
CLOCK 0
min: 3.80e-23
max: 9.80e-22
CLOCK 1
min: 3.80e-23
max: 9.80e-22
CLOCK 2
min: 3.80e-23
max: 9.80e-22
CLOCK 3
min: 3.80e-23
0 1000 2000 3000 4000 5000 6000 7000 8000 9000 10000 11000 12000